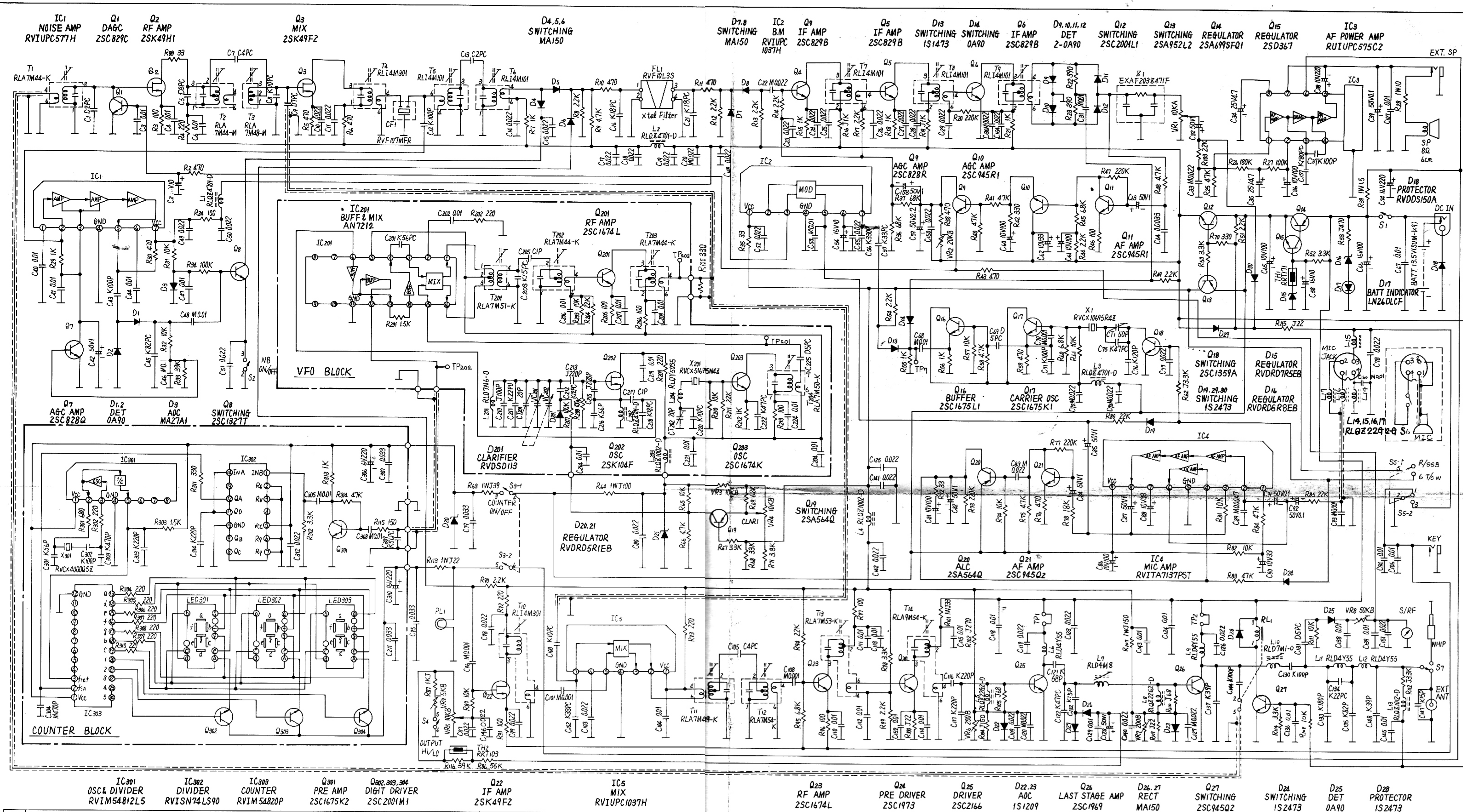

C	1 3 4 2 5 6 7 8 9 10 11 12 13 14 15 16 17 18 19 20 21 149 22 23 52 24 25 53 54 55 150 56 57 26 27 28 158 59 29 30 154 60 61 62 31 63 64 32 33 34 35 65 36 58 37 38 39 107 66 67 74
	40 41 42 43 44 45 46 47 48 49 50 51 201 202 210 211 203 205 212 213 206 214 215 216 207 217 218 219 209 220 221 222 224 225 204 142 125 141 68 81 82 69 83 70 71 72 73 75 84 76 85 86 87 88 77 89 90 91 92 93 78 160 94 106 151
	304 301 302 303 313 314 312 305 306 307 308 309 310 311 95 96 79 97 98 146 99 100 101 102 103 80 104 105 108 110 111 112 113 152 114 115 116 117 118 119 109 120 121 122 123 140 143 124 127 126 137 144 128 129 132 130 131 136 133 134 135 138 139 144 145 147
R	3 88 2 4 5 6 7 8 9 10 11 12 106 35 13 14 15 16 17 36 18 37 19 38 20 40 21 41 42 43 22 23 44 45 46 47 48 49 103 50 70 25 26 27 51 52 53 39 28
	29 30 31 32 33 24 34 201 202 63 207 208 203 204 205 206 64 209 65 66 210 211 212 213 67 68 69 71 54 55 72 73 56 57 58 74 75 76 77 78 59 60 61 79 80 62 81 82 83 84 85
	301 302 303 304 305 306 307 308 309 310 311 312 313 314 315 87 86 116 89 90 113 91 92 93 94 95 96 97 98 99 100 101 102 104 105 107 109 110 114 111 108 112

NOTES

- S1 POWER SOURCE SWITCH "OFF" POSITION INDICATED.
- S2 NOISE BLANKER SWITCH "OFF" POSITION INDICATED.
- S3 COUNTER SWITCH "OFF" POSITION INDICATED
- S4 OUTPUT POWER SWITCH "LOW" POSITION INDICATED.
- S5 MODE SWITCH "R/SSB" POSITION INDICATED.
- S6 PUSH TO TALK SWITCH "RECEIVE" POSITION INDICATED.
- S7 ANTENNA SELECT SWITCH "EXT" POSITION INDICATED.

- PARTS NO 1 TO 199 IS ON THE MAIN BLOCK.
- PARTS NO 201 TO 299 IS ON THE VFO BLOCK.
- PARTS NO 301 TO 399 IS ON THE COUNTER BLOCK.

TOLERANCE

C = ± 0.25PF D = ±0.5PF J = ±5% K = ±10% M = ± 20%

TOLERANCE OF CAPACITORS IS Z = $^{+80\%}_{-20\%}$ UNLESS OTHERWIRE INDICATED.
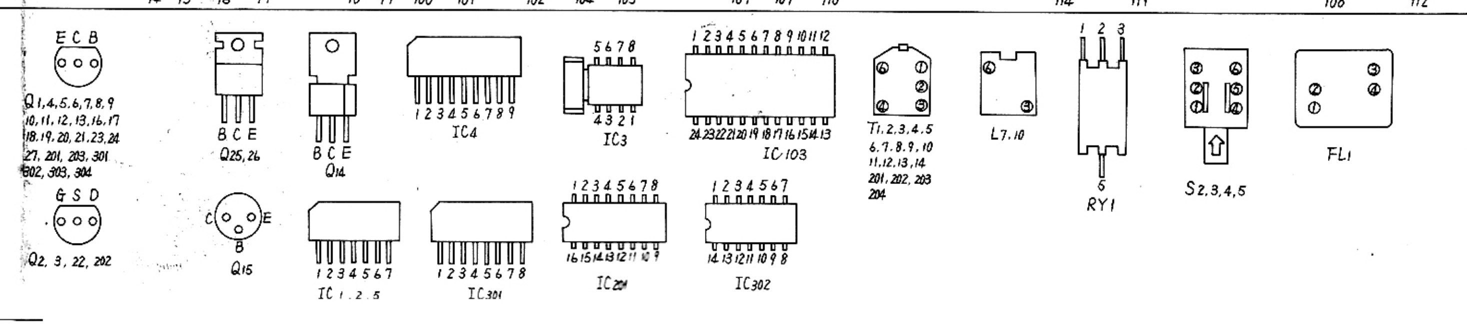
TOLERANCE OF RESISTORS IS K = ±10% UNLESS OTHERWIRE INDICATED.